NiMH battery

SANUPS

ONLINE UPS

A11G-Ni

UL Models

SANYO DENKI

A11G-Ni

Double Conversion Online UPS without Toxic Lead-Acid Batteries

ECO PRODUCTS

NiMH battery

Lineup

[No. of phases/wires] Input/Output voltage	Output capacity (kVA)	Output capacity (kW)	Battery backup time Standard
[Single-phase 2-wire] **100 V** model 100, 110, 115, 120 V	1.5	1.05	18 min
[Single-phase 2-wire] **200 V** model 200, 220, 230, 240 V	1.5	1.2	15 min

Circuit Diagram

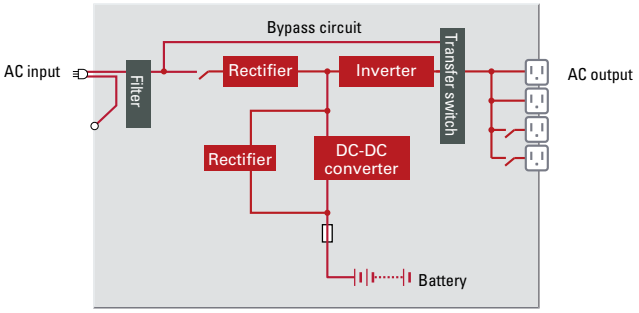

Maintenance-Free for 10 Years

- This UPS is equipped with nickel-metal hydride batteries.
- Expected battery life has doubled (to 10 years at 25°C) compared with conventional models.

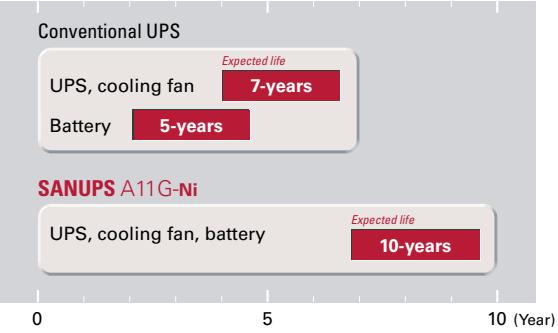

Easy Setup for Sequential System Startup and Shutdown

- The timing of power on and shutdown of hard drives or servers can be easily scheduled.

Note: For 200 V models, control outputs 1 and 2 are enabled simultaneously.

[Configuration Example]

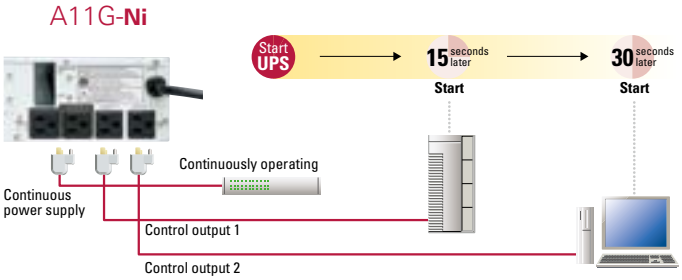

Battery Cold Start Function

Batteries can start up the UPS even when grid AC power is not available, enabling inverter operation.

Installation Examples

Mounted in an EIA standard 19-inch rack

Note: Mounting brackets and rack support rails are optional.

Vertical installation

Views and Part Names

Outlet/Plug Types

AC	Output capacity	Model no.	Input plug	Output outlet
100 V model	1.5 kVA	**A11GN152A001**	NEMA 5-15P	NEMA 5-15R × 4
200 V model	1.5 kVA	**A11GN152A002**	NEMA L6-20P	IEC 60320-C13 × 4

Specifications

Item			Model no.**	A11GN152A001	A11GN152A002	Remarks
Rated output capacity* (apparent power / active power)				1.5 kVA / 1.05 kW	1.5 kVA / 1.2 kW	
System	Topology			True online double conversion		
	Rectifier			High power factor converter		IGBT
	Cooling method			Forced air cooling		
	Inverter			High-frequency PWM		
AC input	Number of phases/wires			Single-phase 2-wire		
	Voltage range			Within ±15% of rated output voltage		
	Rated frequency			50/60 Hz		Auto-detection
	Frequency range			Within ±1, ±3, or ±5% of rated frequency (factory setting: ±3%)		
	Required capacity			1.3 kVA	1.35 kVA	Max. capacity when batteries are fully charged
	Input power factor			0.95 or greater		When the input voltage harmonic distortion < 1%
AC output	Number of phases/wires			Single-phase 2-wire		
	Rated voltage			100, 110, 115, 120 V	200, 220, 230, 240 V	Selected at the time of shipment
	Voltage regulation			Within ±2% of rated voltage		
	Rated frequency			50/60 Hz		Same as the input rated frequency
	Frequency regulation	During grid operation		Within ±1, ±3, or ±5% of rated frequency		Selectable (factory setting: ±3%)
		During battery operation		Within ±0.5% of rated frequency		
	Voltage harmonic distortion	At linear load		3% or less		At rated output
		At rectifier load		7% or less		At rated output
	Rated load power factor			0.7 (lagging)	0.8 (lagging)	Range: 0.7 (lagging) to 1.0
	Transient voltage regulation	Abrupt load change		Within ±5% of rated voltage		For 0 ⇔ 100% load step changes
		Loss/return of input power		Within ±5% of rated voltage		At rated output
		Abrupt input voltage change		Within ±5% of rated voltage		For ±10% changes
	Overcurrent protection			Automatic transfer to bypass (with automatic return function)		
	Overload capability	Inverter		105% (for 200 ms)		
		Bypass		200% (for 30 s), 800% (for 2 cycles)		
Battery	Type			Nickel-metal hydride (NiMH) sealed cylindrical battery		
	Backup time			18 min	15 min (18 min at 1.05 kW)	At ambient temperature 25°C and rated output, under factory conditions
Acoustic noise				40 dB or less		At 1 m from front of unit, A-weighting
Heat dissipation				145 W		
Input leakage current				3 mA or less		
Safety standard				UL 1778 2nd edition (E226092), VCCI Class A		
Operating environment				Ambient temperature: 0 to 40°C; relative humidity: 30 to 90% (non-condensing)		

* A11GN152A001 has the following rated output capacities in accordance with the UL standard. (The maximum output capacity is 1.5 kVA / 1.05 kW for each voltage)
1.25 kVA / 1.05 kW for 100 V; 1.35 kVA / 1.05 kW for 110 V; 1.45 kVA / 1.05 kW for 115 V; 1.5 kVA / 1.05 kW for 120 V.
**The model number differs depending on the input/output voltage selection. Refer to the following table.

Model List

Input/Output rated voltage	Model no.
100 V	**A11GN152A001**
110 V	**A11GN152A001-10**
115 V	**A11GN152A001-15**
120 V	**A11GN152A001-20**
200 V	**A11GN152A002**
220 V	**A11GN152A002-20**
230 V	**A11GN152A002-30**
240 V	**A11GN152A002-40**

Load Level vs Backup Time

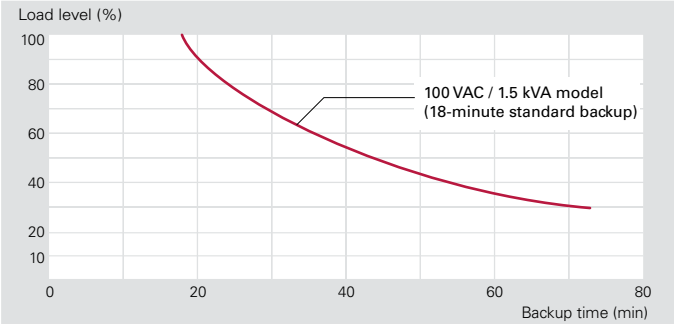

Note: At 25°C ambient temperature and load power factor of 0.7, under factory conditions.

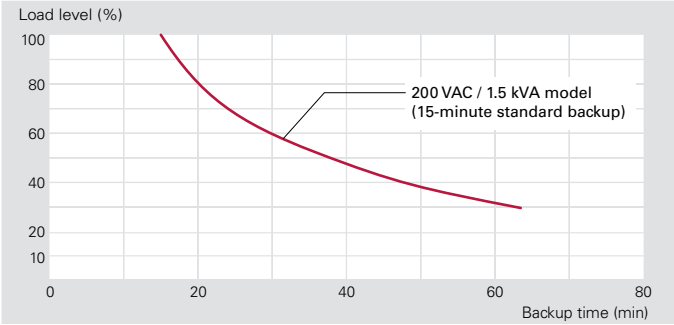

Note: At 25°C ambient temperature and load power factor of 0.8, under factory conditions.

Dimensions (Unit: mm)

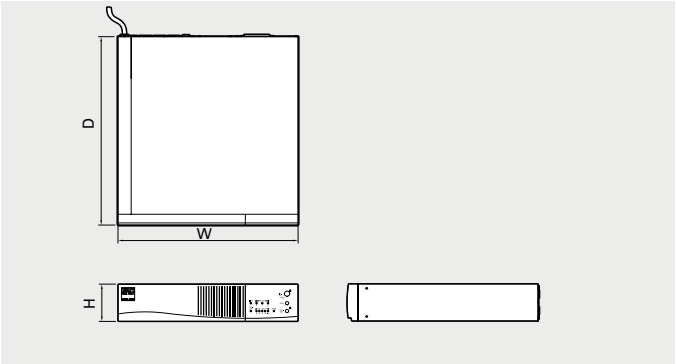

W	D	H	Mass
410	540	86	24 kg

Paint color: Ivory (Munsell 6.6Y 8.3/0.8)

Options

Item	Model		Description
LAN interface card	IPv6 model	**PRLANIF011B-US**	This card enables 24/7 monitoring of UPS operations and status, and e-mail notifications to system administrators via network in the event of a power failure.
	Environment monitoring, IPv6 model	**PRLANIF013B-US**	Combined with our temperature sensor (**PRLANSN001**) and humidity sensor (**PRLANSN002**), this model enables monitoring of UPS ambient temperature and humidity.
Dry contact interface card	Terminal block output	**PRCONIF001**	This card outputs no-voltage signals to notify UPS status. A and B contacts can be selected for each signal.
	D-sub connector	**PRCONIF003**	
SANUPS SOFTWARE	Windows version, IPv6 model	**PMS50□00E**[2]	Computer-based power management software (installation required) For updated OS support information, please refer to our website. For bulk purchase of software licenses, append an appropriate -suffix to the model number. **-10** (10 licenses) **-50** (50 licenses) **-100** (100 licenses)
	Multi-OS version[1], IPv6 model	**PMS51□00E**[2]	
Rack mounting brackets	**RMASEB02R-US**		Used for mounting the UPS on a standard 19-inch rack.
Rack support rails	**RM014R-US**		Used for mounting the UPS on a standard 19-inch rack.

Note: Optional products have different operating temperature ranges from the UPS.
[1] Supports Windows, Unix, and Linux.
[2] The □'s denote revision characters.

Rack Support Rail Dimensions (Unit: mm) Rack mounting brackets are optional.

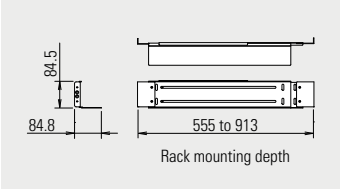

A pair of left and right rails. Shown is the left rail.

Notes before Purchase

- Before installing, assembling, and using the product, please read Instruction Manual carefully and use it properly.
- When using this product in the following applications, consult us in advance because special considerations are required for operation, maintenance, and management.
  (a) Medical equipment that may have direct effects on human life or human body.
  (b) Trains, elevators, and other machinery that can cause injury.
  (c) Socially and publicly important computer systems.
  (d) Other equipment that is related to safety of human life and that can have major impact on maintenance of public functions.
- For use in an environment where vibration is present, such as in a car or a ship, please consult us in advance.
- Never attempt to disassemble or alter the product in any way.
- For installation and maintenance work of the product, please consult us or properly licensed personnel.
- Products listed in this catalog may be regulated by export laws and regulations in each country. When exporting these products, compliance with each country's respective export laws and regulations is highly recommended.
- SANYO DENKI will not be liable for any direct or indirect damages or loss, including but not limited to equipment downtime, missed power sales revenue, business interruptions, increased power purchases, resulting from the use of or inability to use our products or services.

Note: For any inquiry or consultation, please contact our sales department.

https://www.sanyodenki.com

SANYO DENKI CO., LTD.
3-33-1 Minami-Otsuka, Toshima-ku, Tokyo 170-8451, Japan
TEL: +81 3 5927 1020

SANYO DENKI *AMERICA, INC.*
468 Amapola Avenue Torrance, CA 90501, U.S.A.
TEL: +1 310 783 5400

CATALOG No.P1034B001 '18.7